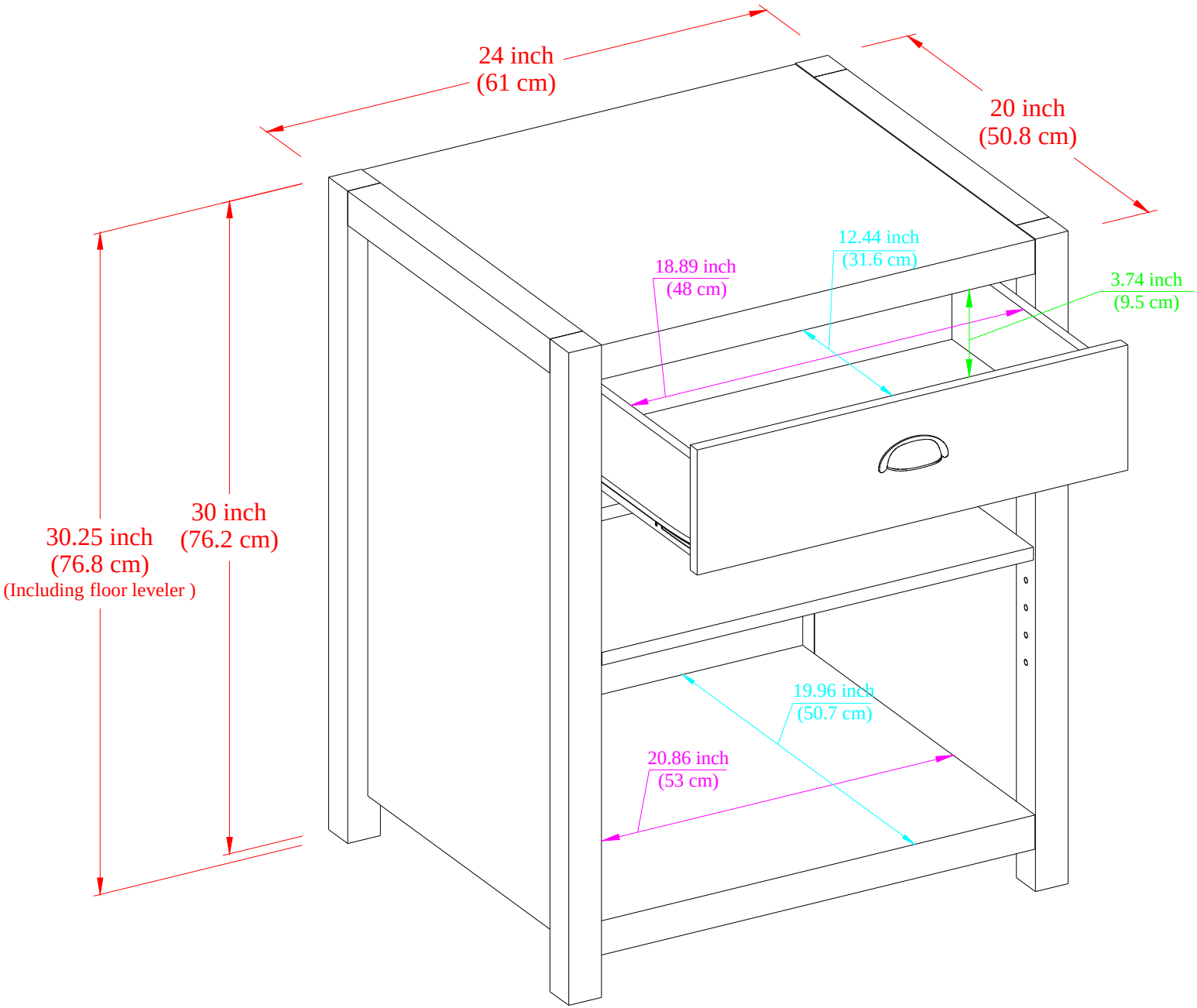
24 inch
(61 cm)
20 inch
(50.8 cm)
12.44 inch
(31.6 cm)
18.89 inch
(48 cm)
3.74 inch
(9.5 cm)
30.25 inch
(76.8 cm)
(Including floor leveler)
30 inch
(76.2 cm)
19.96 inch
(50.7 cm)
20.86 inch
(53 cm)