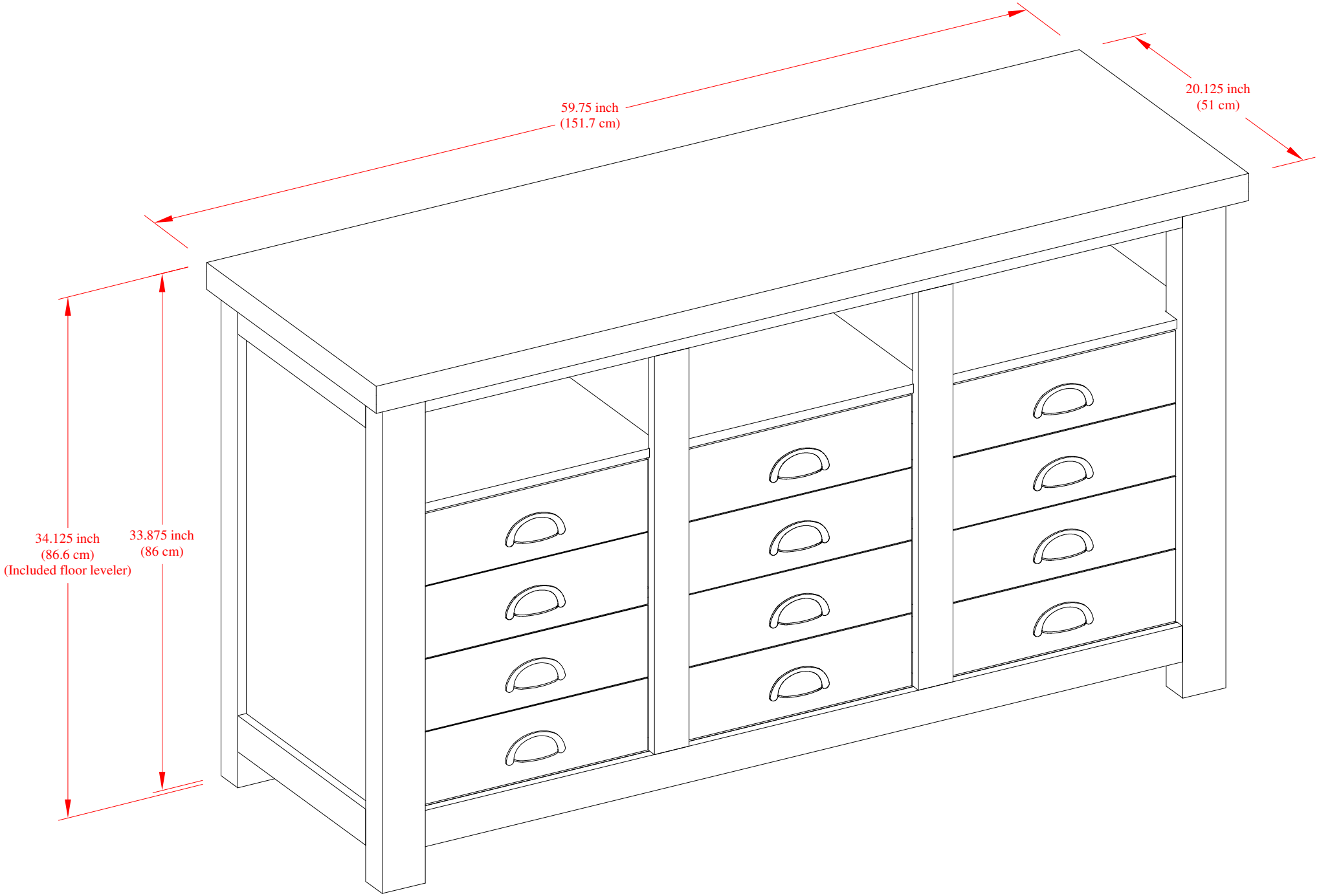
59.75 inch
(151.7 cm)
20.125 inch
(51 cm)
34.125 inch
(86.6 cm)
(Included floor leveler)
33.875 inch
(86 cm)