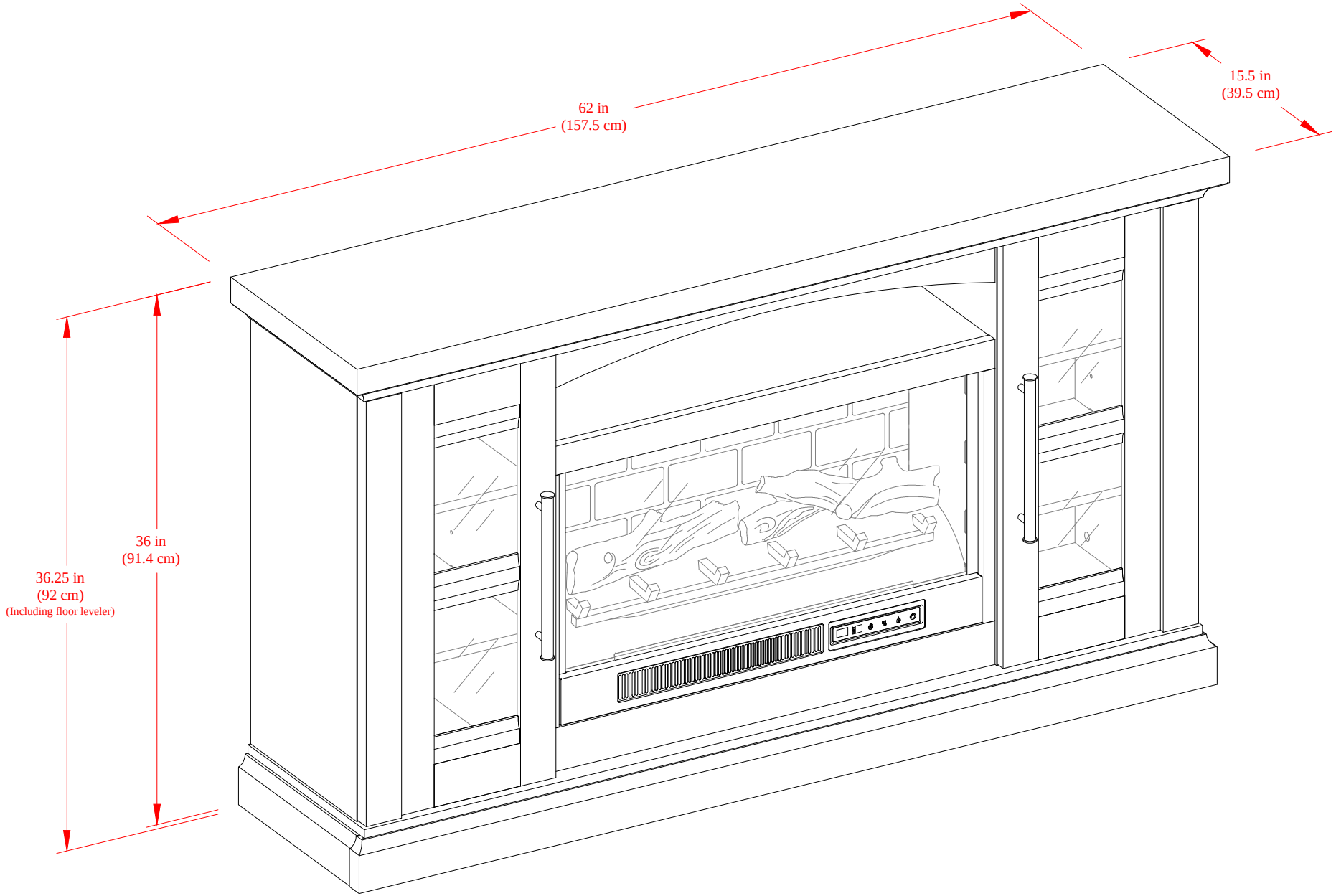
62 in
(157.5 cm)
15.5 in
(39.5 cm)
36 in
(91.4 cm)
36.25 in
(92 cm)
(Including floor leveler)

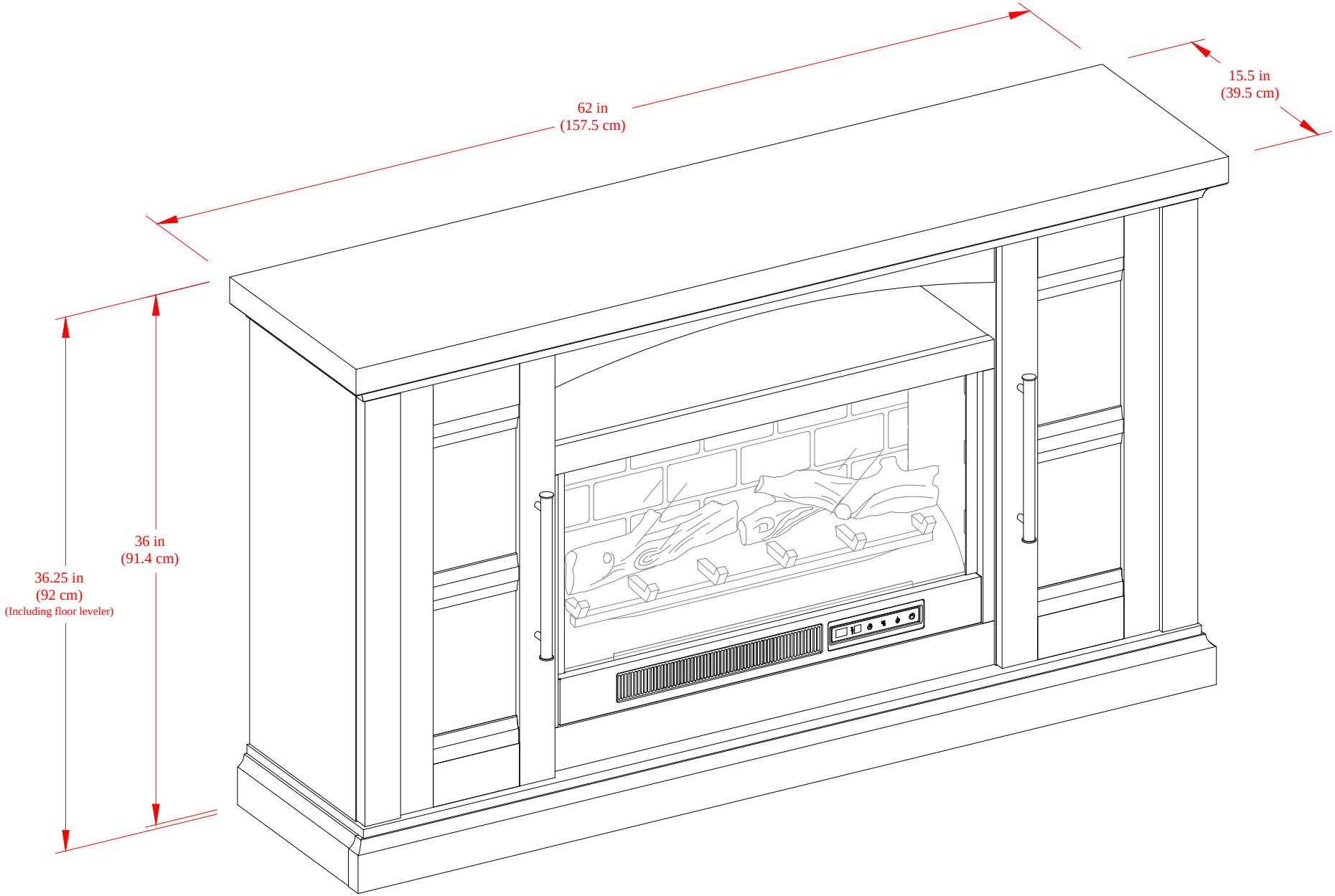
62 in
(157.5 cm)
15.5 in
(39.5 cm)
36 in
(91.4 cm)
36.25 in
(92 cm)
(Including floor leveler)