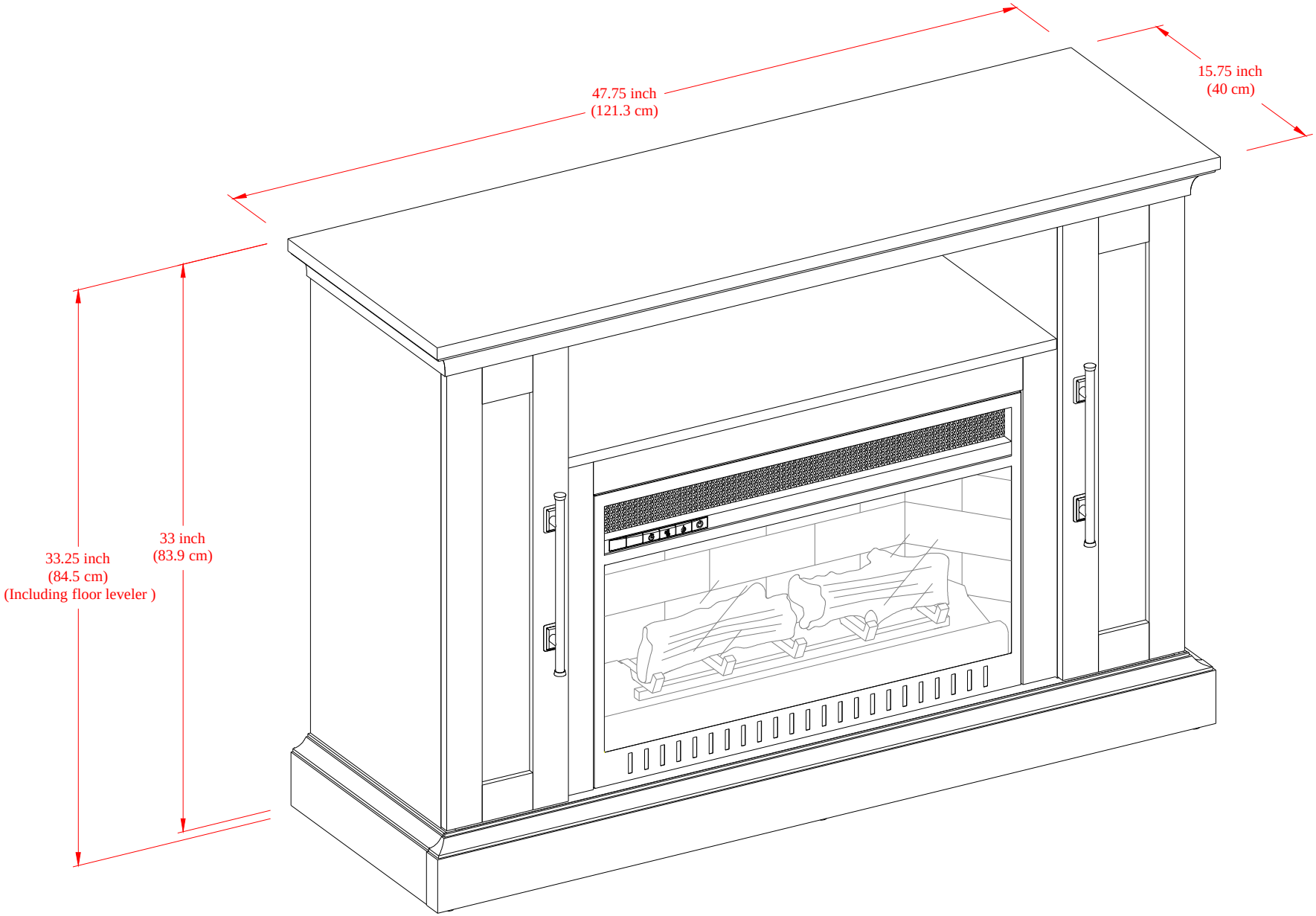
47.75 inch
(121.3 cm)
15.75 inch
(40 cm)
33.25 inch
(84.5 cm)
(Including floor leveler)
33 inch
(83.9 cm)

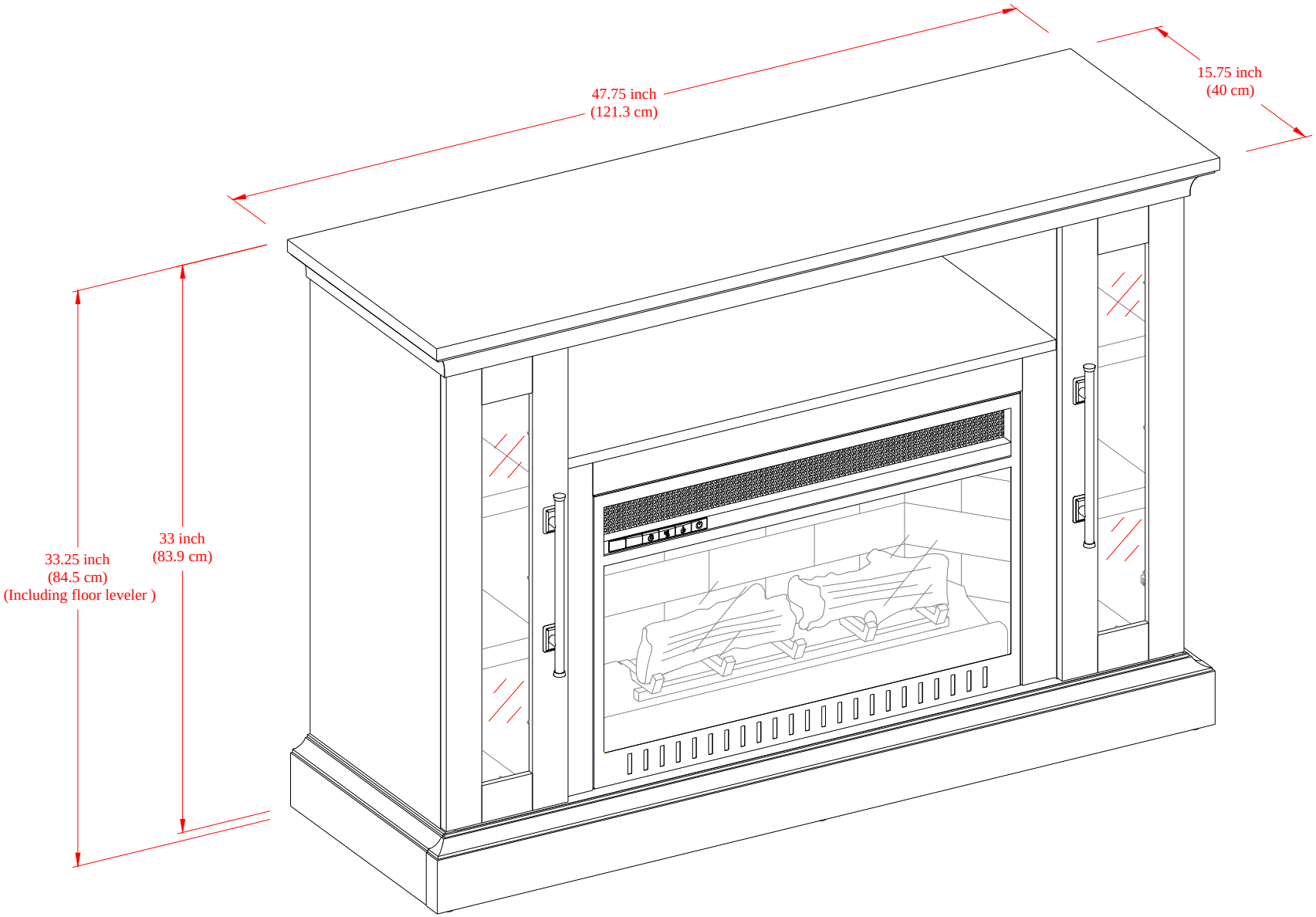
47.75 inch
(121.3 cm)
15.75 inch
(40 cm)
33.25 inch
(84.5 cm)
(Including floor leveler)
33 inch
(83.9 cm)

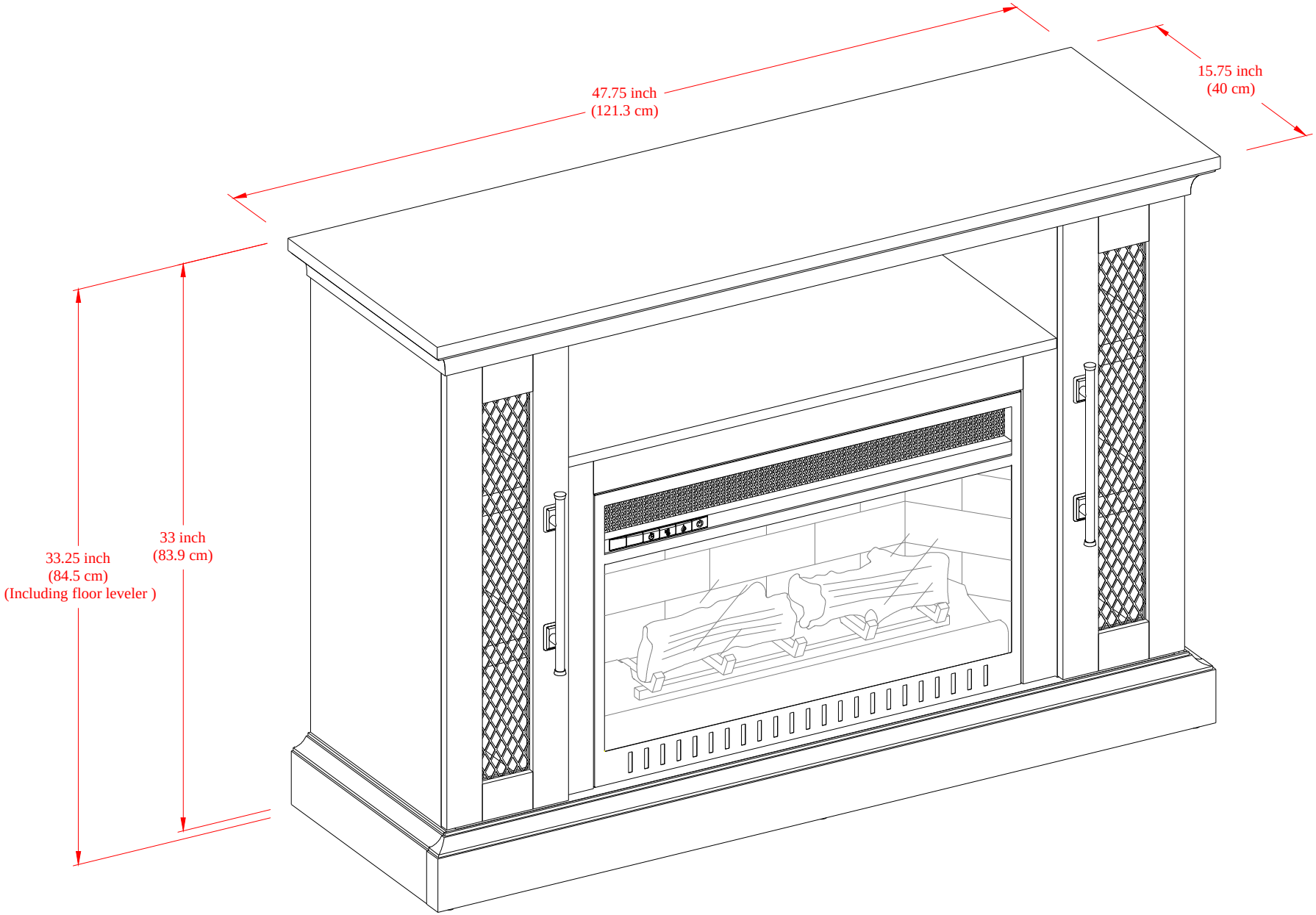
47.75 inch
(121.3 cm)
15.75 inch
(40 cm)
33.25 inch
(84.5 cm)
(Including floor leveler)
33 inch
(83.9 cm)