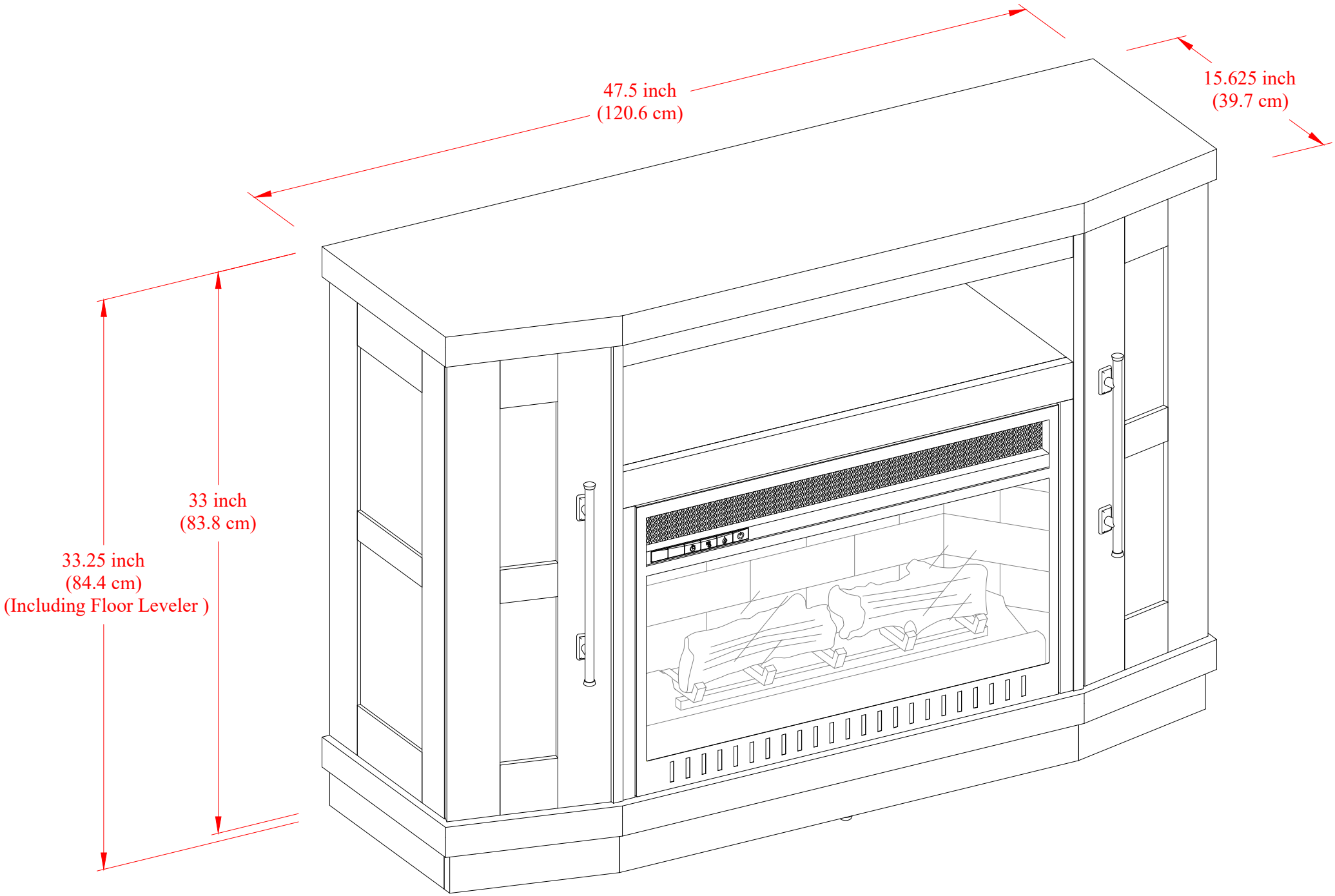
47.5 inch
(120.6 cm)
15.625 inch
(39.7 cm)
33 inch
(83.8 cm)
33.25 inch
(84.4 cm)
(Including Floor Leveler)

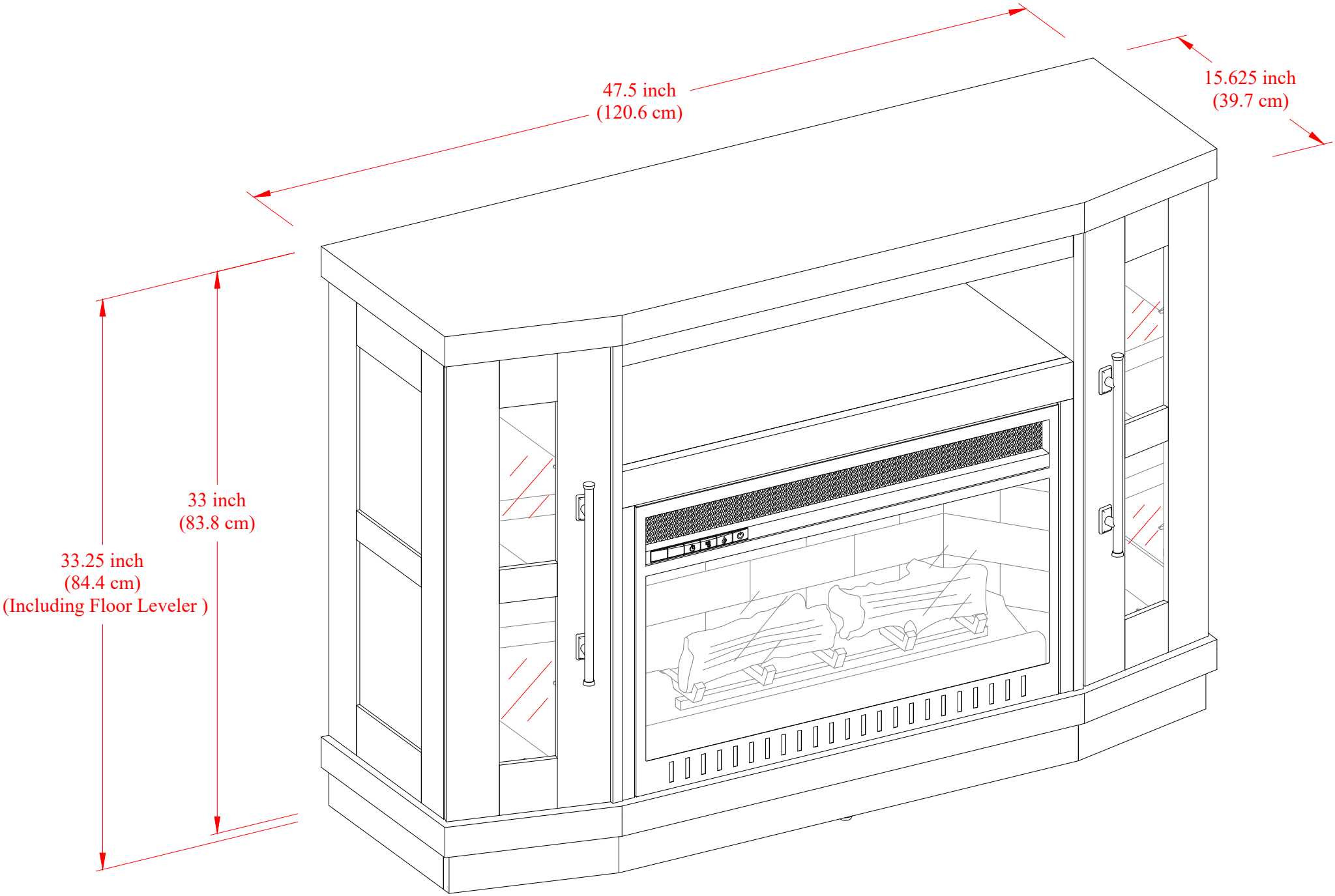
47.5 inch
(120.6 cm)
15.625 inch
(39.7 cm)
33 inch
(83.8 cm)
33.25 inch
(84.4 cm)
(Including Floor Leveler)