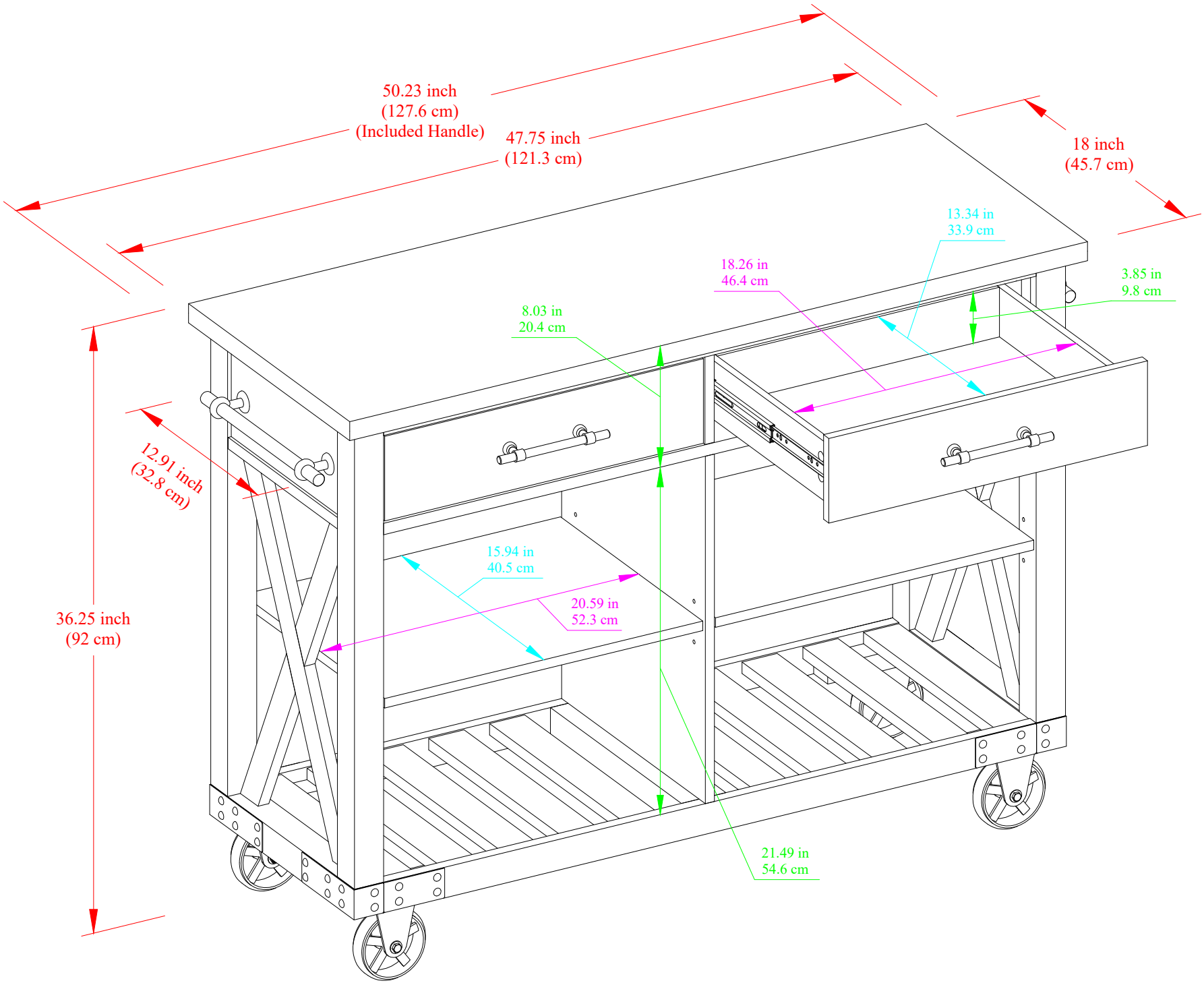
50.23 inch
(127.6 cm)
(Included Handle)
47.75 inch
(121.3 cm)
18 inch
(45.7 cm)
13.34 in
33.9 cm
18.26 in
46.4 cm
3.85 in
9.8 cm
8.03 in
20.4 cm
12.91 inch
(32.8 cm)
15.94 in
40.5 cm
20.59 in
52.3 cm
36.25 inch
(92 cm)
21.49 in
54.6 cm