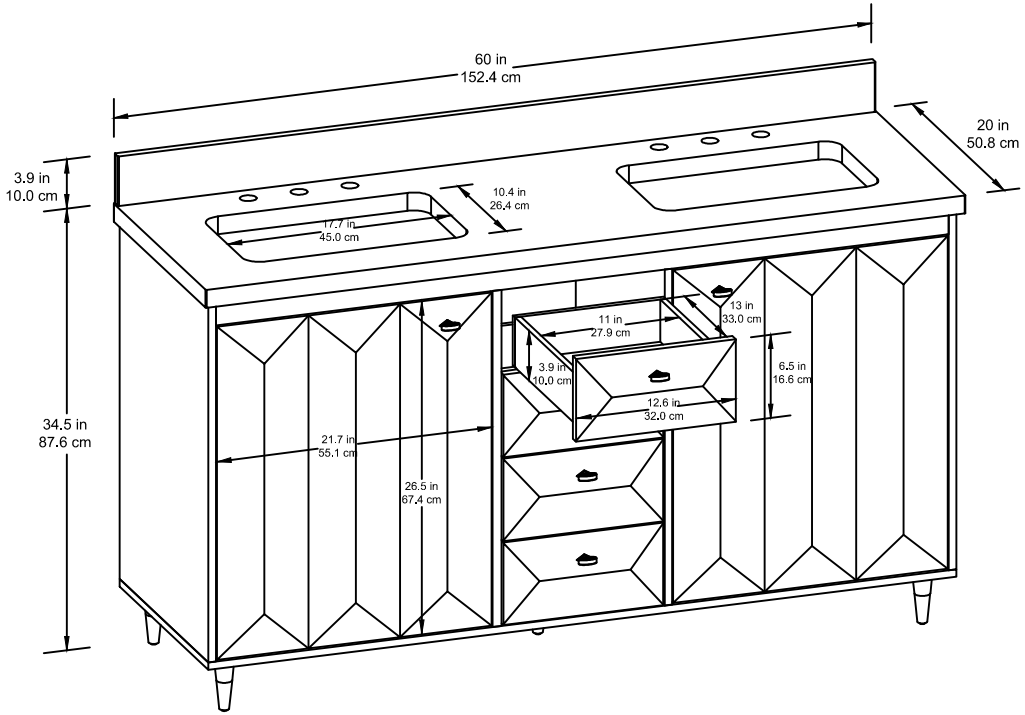
60 in
152.4 cm
20 in
50.8 cm
3.9 in
10.0 cm
10.4 in
26.4 cm
17.7 in
45.0 cm
11 in
27.9 cm
13 in
33.0 cm
3.9 in
10.0 cm
6.5 in
16.6 cm
12.6 in
32.0 cm
34.5 in
87.6 cm
21.7 in
55.1 cm
26.5 in
67.4 cm

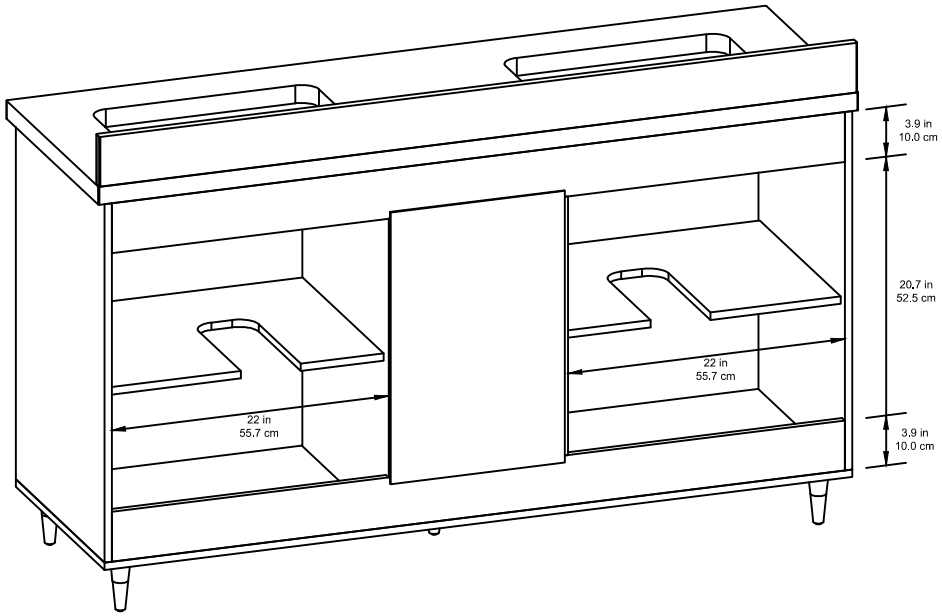
3.9 in
10.0 cm
20.7 in
52.5 cm
22 in
55.7 cm
22 in
55.7 cm
3.9 in
10.0 cm