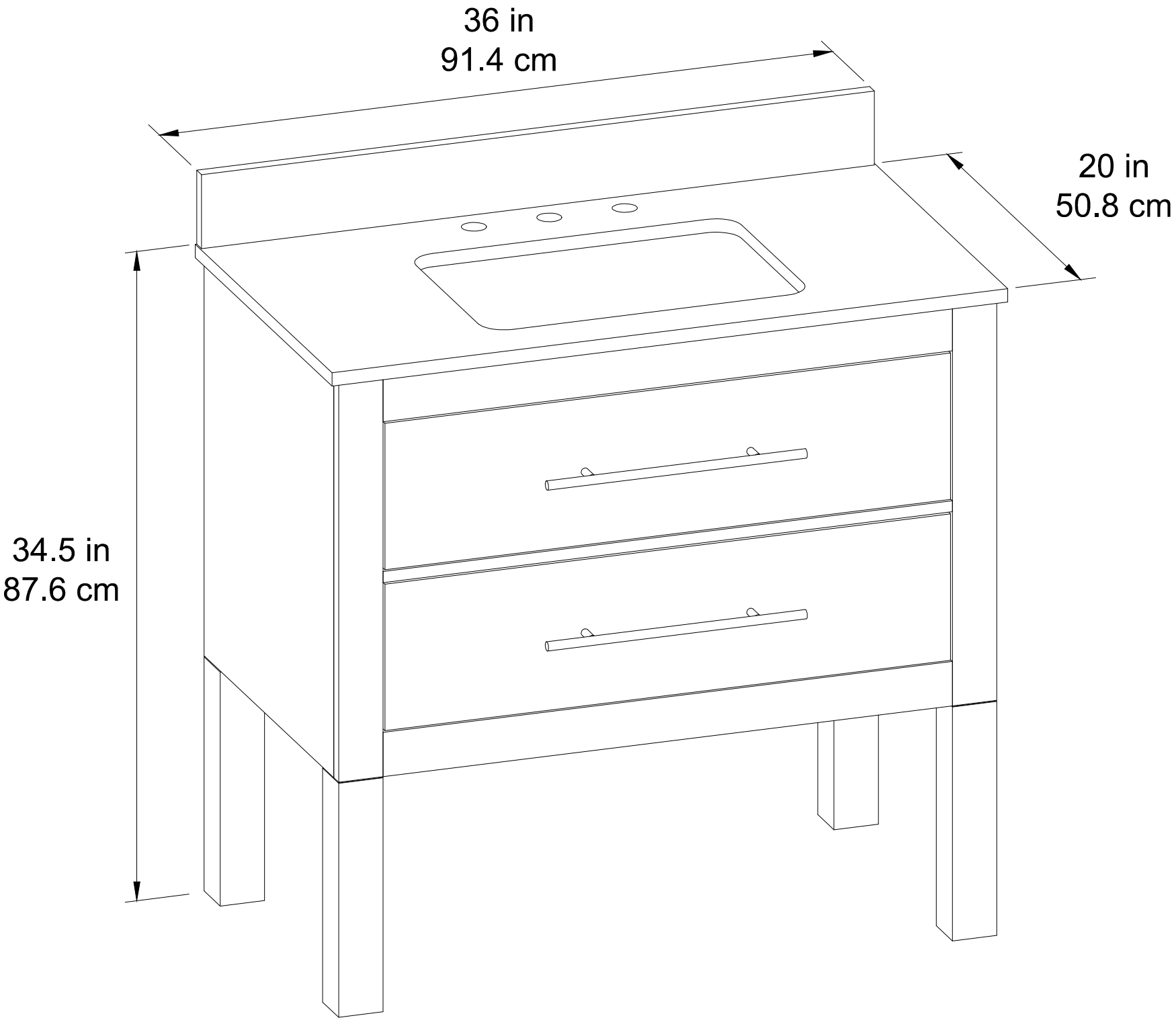
36 in
91.4 cm
20 in
50.8 cm
34.5 in
87.6 cm