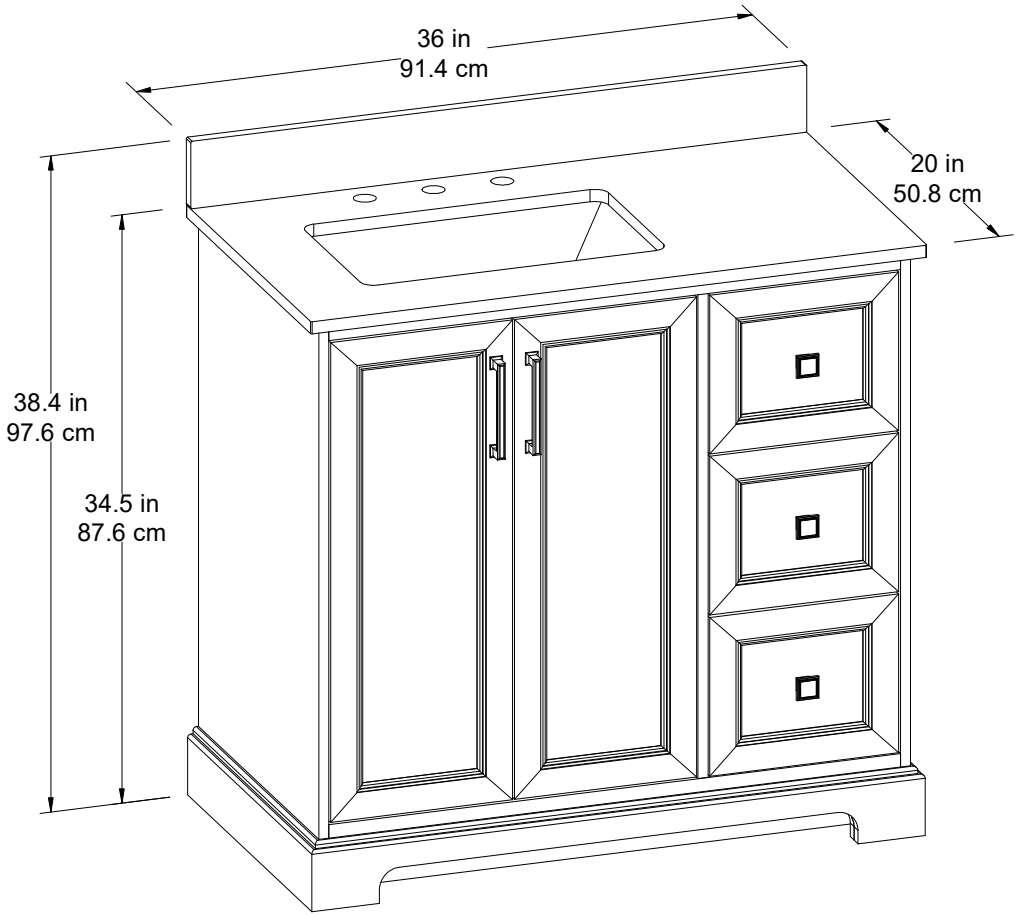
36 in
91.4 cm
20 in
50.8 cm
38.4 in
97.6 cm
34.5 in
87.6 cm

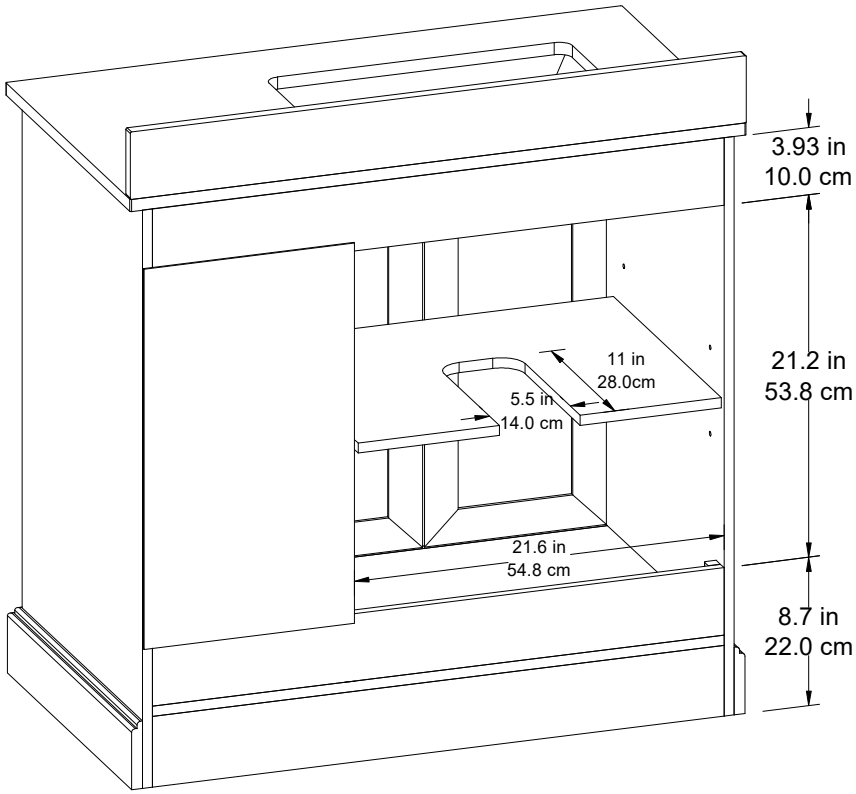
3.93 in
10.0 cm
21.2 in
53.8 cm
11 in
28.0cm
5.5 in
14.0 cm
21.6 in
54.8 cm
8.7 in
22.0 cm