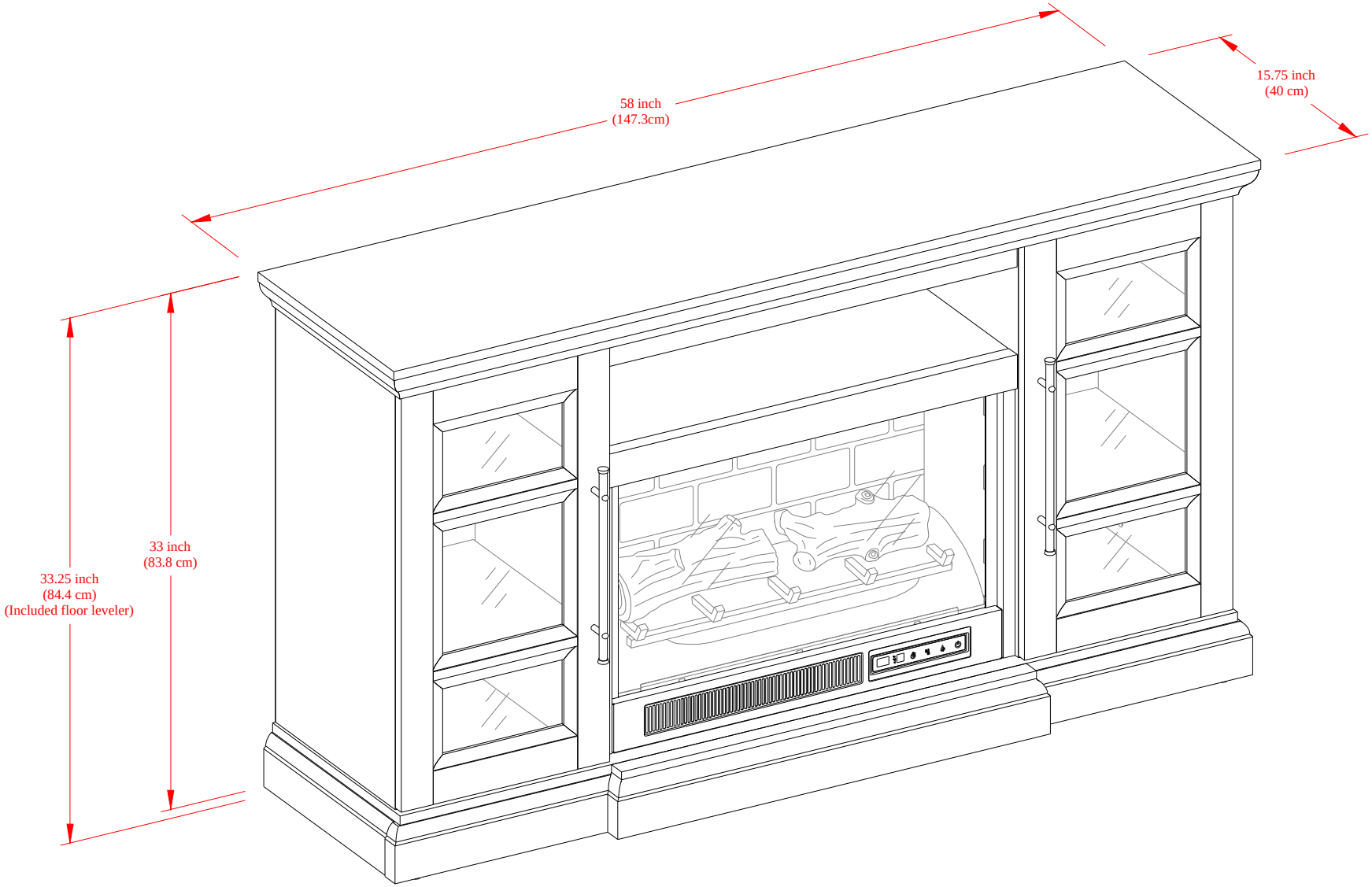
58 inch
(147.3cm)
15.75 inch
(40 cm)
33.25 inch
(84.4 cm)
(Included floor leveler)
33 inch
(83.8 cm)

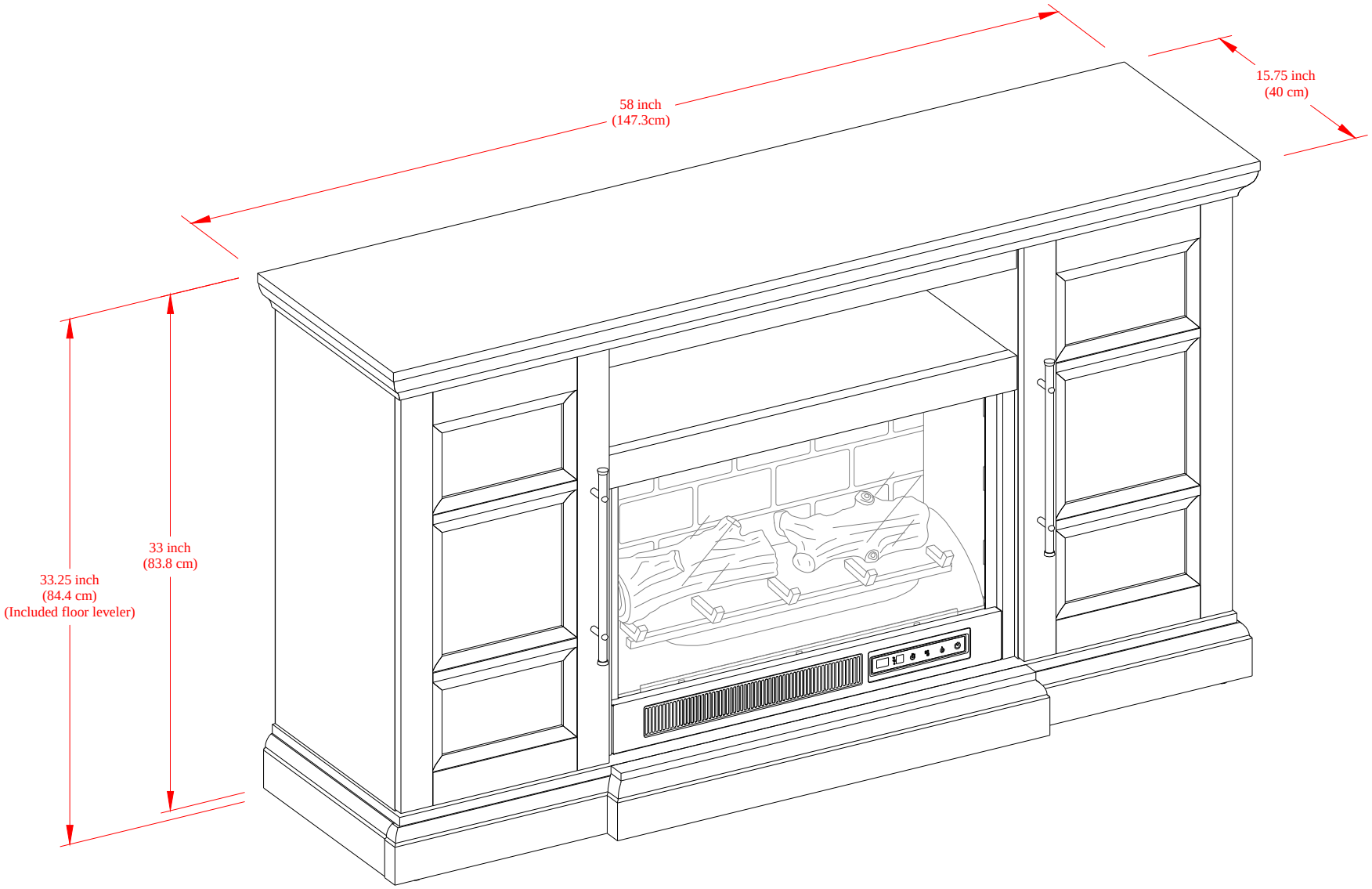
58 inch
(147.3cm)
15.75 inch
(40 cm)
33.25 inch
(84.4 cm)
(Included floor leveler)
33 inch
(83.8 cm)