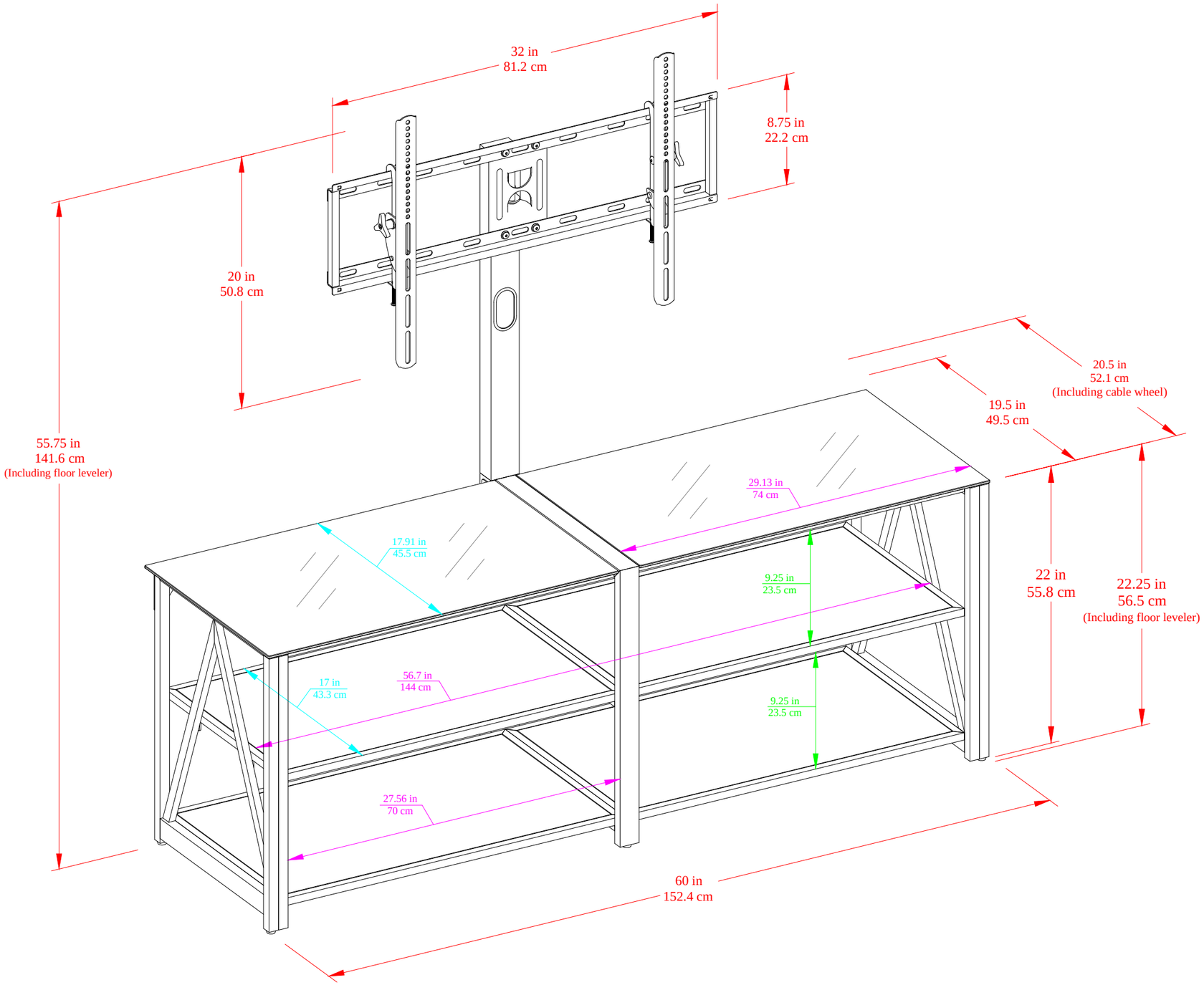
32 in
81.2 cm
8.75 in
22.2 cm
20 in
50.8 cm
55.75 in
141.6 cm
(Including floor leveler)
20.5 in
52.1 cm
(Including cable wheel)
19.5 in
49.5 cm
29.13 in
74 cm
17.91 in
45.5 cm
9.25 in
23.5 cm
22 in
55.8 cm
22.25 in
56.5 cm
(Including floor leveler)
17 in
43.3 cm
56.7 in
144 cm
9.25 in
23.5 cm
27.56 in
70 cm
60 in
152.4 cm